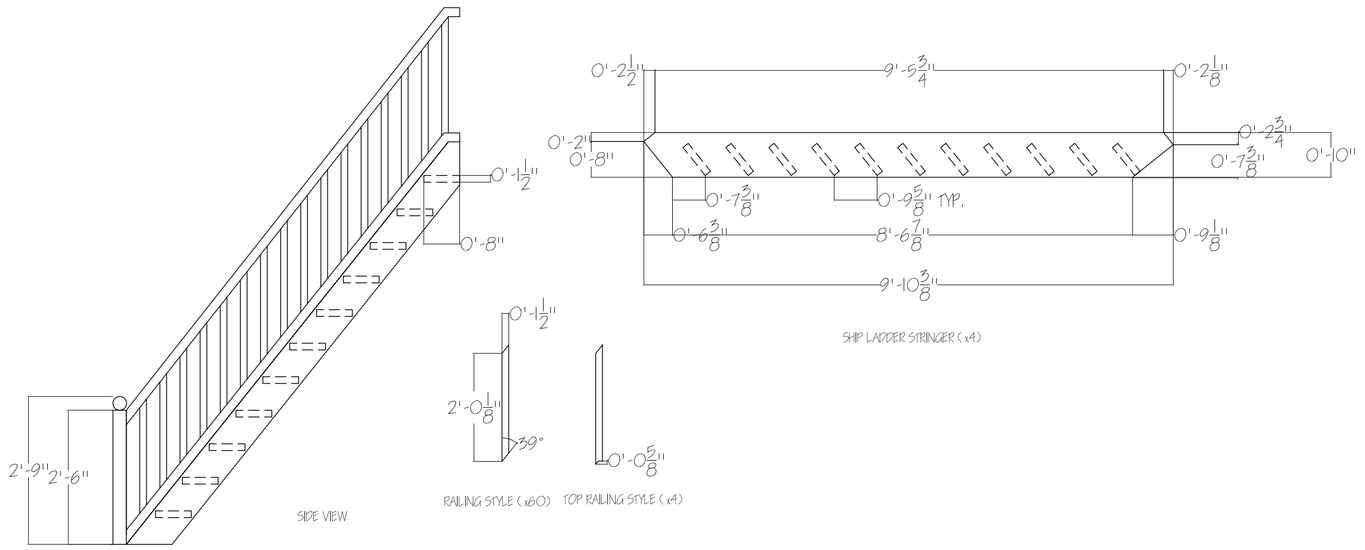

1 / T1 SHIPS LADDER (BUILD 2)
SCALE: 1/2"

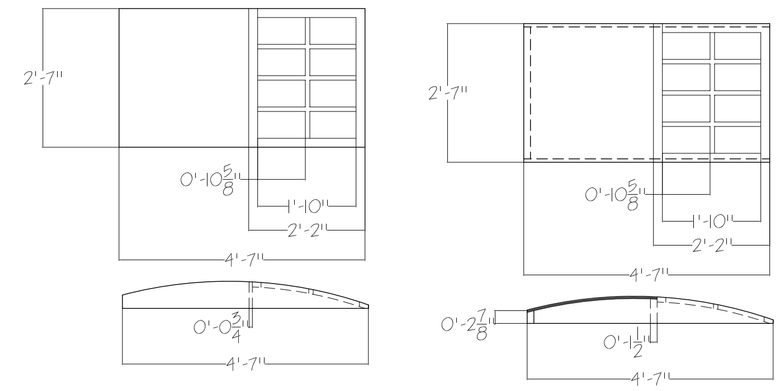

2 / T1 TRAP DOOR
SCALE: 1/2"

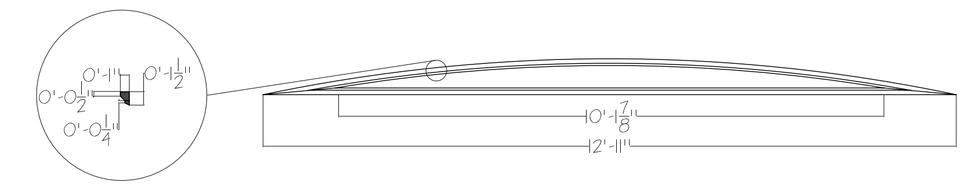

3 / T1 UPPER DECK HEADER
SCALE: 1/2"

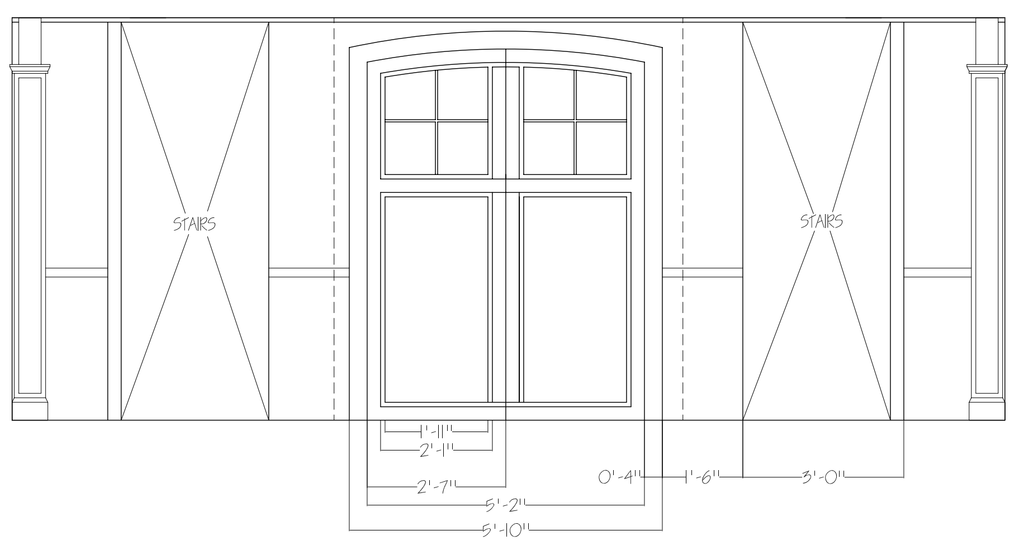

4 / T1 LOWER WALL B-1, B-2, B-3 DETAIL
SCALE: 1/2"

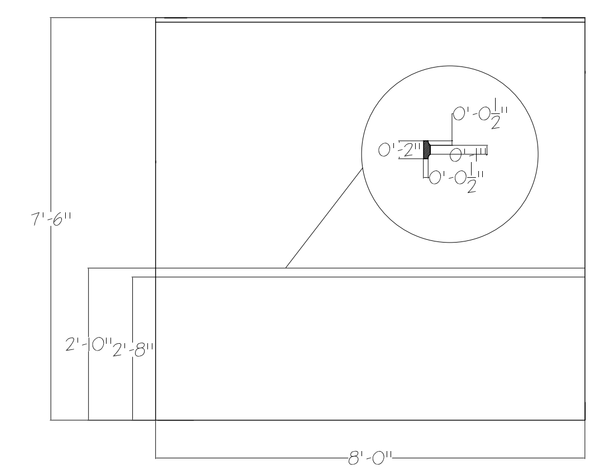

5 / T1 LOWER WALL A & C (2) DETAIL
SCALE: 1/2"

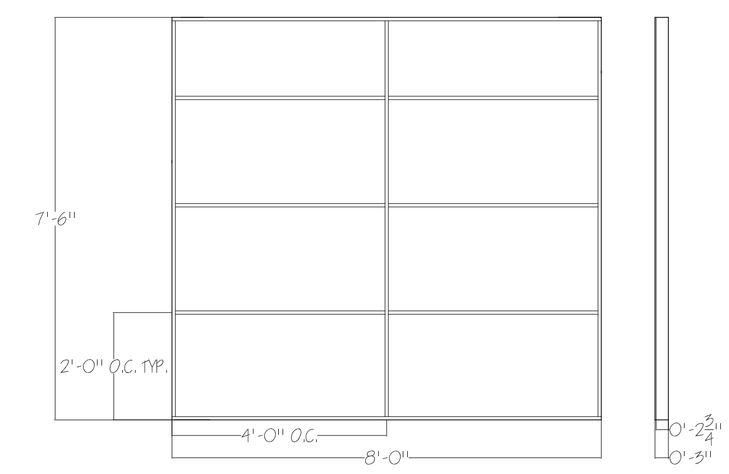

6 / T1 LOWER WALL A&C (2) CONSTRUCTION
SCALE: 1/2"

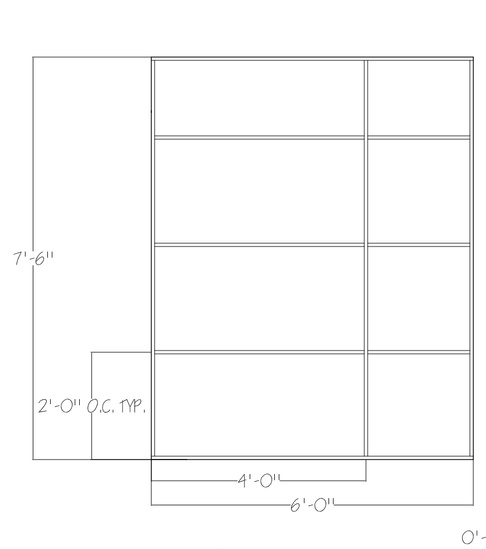

7 / T1 LOWER WALL B-1 CONSTRUCTION
SCALE: 1/2"

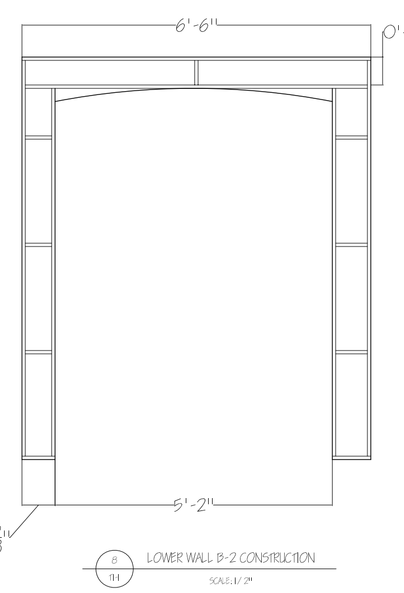

8 / T1 LOWER WALL B-2 CONSTRUCTION
SCALE: 1/2"

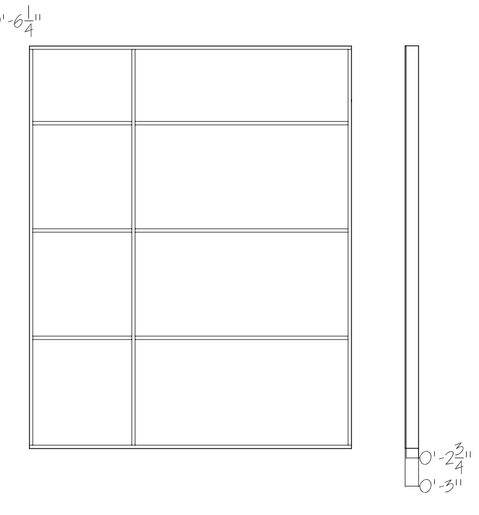

9 / T1 LOWER WALL B-3 CONSTRUCTION
SCALE: 1/2"

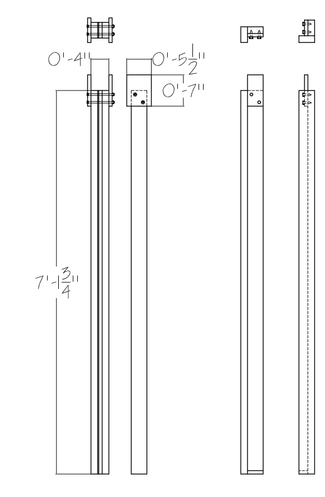

MODEL PHOTO

THE OHIO LIGHT OPERA - 28TH SEASON - 2006

HMS PINAFORE

CONSTRUCTION		DWG. NO.
DIRECTOR: TED CHRISTOPHER		T1-1
DESIGNER: SHELLEY HELENE BARISH		
TECH DIRECTOR: BRIAN C. ADAMS & JONATHAN SAGE		OF_____
DRAFTER: J.T. SAGE		CKD:
APPROVED: DATE:	SCALE: 1/2" = 1'-0"	DRAWING DATE: 5-11-06